iBROW project newsletter #5

February 2018

Welcome to the fifth iBROW project newsletter!

iBROW is a research project supported by the European Commission through Horizon 2020 under Grant Agreement 645369.

iBROW has made excellent progress over the last three years and is set to exceed its target objectives. In order to complete the additional work and include everything in the final project demonstration the EC has agreed to extend the project by six months, so it will now finish at the end of Jun-2018. The demonstration will be part of the workshop to be held in Glasgow in Apr-2018! This newsletter also contains:

- *iBROW final workshop (Glasgow , UK; 23-24 Apr-2018) – see below!!!*
- *An update on RTD and RTD-PD development work at University of Glasgow*
- *CST investigations into laser dynamics measurement techniques*
- *fotonIC - Fibre Coupled PIC Platform: edge coupled fibre alignment from Optocap*

More information is available on the website (www.ibrow-project.eu).

iBROW final workshop

University of Glasgow, UK
23-24 Apr-2018

iBROW will hold its final workshop as part of a focused Terahertz Electronics event at the University of Glasgow. The detailed agenda will be released soon, and will feature some highly respected international guest speakers.

The workshop will feature fora to discuss current and future trends in THz electronics and applications. There will also be a small industrial exhibition as well as a live demonstration of the project result highlights which includes short range high speed wireless communications using 300 GHz transmitters with data rates of over 10 Gbps based on RTD technology. Please register via the website page: http://ibrow-project.eu/events/ibrow-workshop

Coordinator Edward Wasige edward.wasige@glasgow.ac.uk
Admin Bruce Napier bruce@vividcomponents.co.uk

Advances in RTDs for wireless communications

Wireless communication measurement

The high frequency electronics group at University of Glasgow is developing high performance (*i.e.* high power/high frequency/low phase noise) mm- and sub-mm-wave sources based on resonant tunnelling diodes (RTDs). The applications under study include ultra-fast (>10 Gbps) wireless communication systems and high resolution imaging systems. In addition to the merits mentioned above, low cost, simple circuit scheme, compact size, and room temperature operation make RTDs a very promising technique for next generation wireless communications.

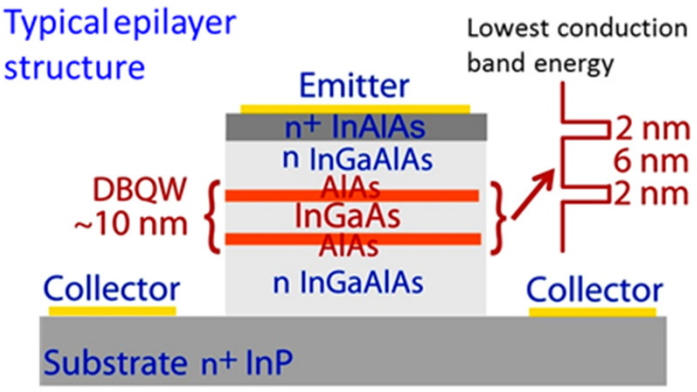

Fig. 1: RTD schematic layer structure.

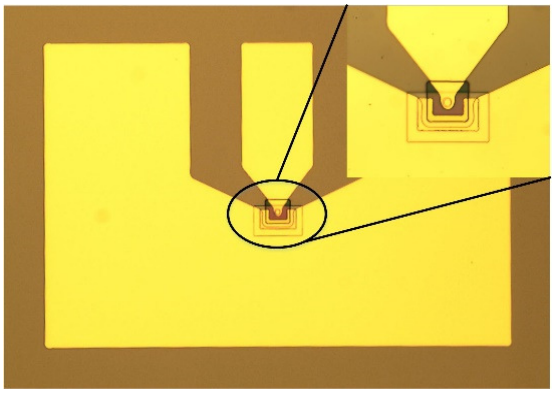

Fig. 2: Fabricated RTD device with central emitter size 16 μm².

The typical RTD layer structure (Fig. 1) consists of a double barrier (AlAs) quantum well (InGaAs) structure. The schematic of the fabricated device (Fig. 2) has an inset showing the central emitter, which is only 16 μm². The measured IV characteristic (Fig. 3) shows that a negative differential resistance (NDR) region exists between bias voltages *c.* 1.0-1.5 V.

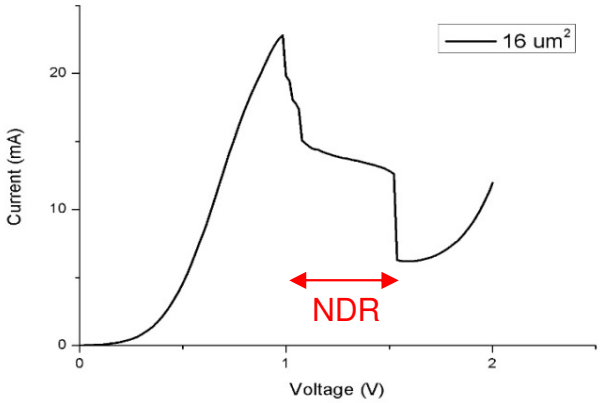

Fig. 3: Measured IV characteristics showing NDR between ~1.0-1.5 V.

The oscillator schematic circuit (Fig. 4) shows how double RTDs were employed in parallel. Each RTD was biased individually. For the on-wafer measurement (Fig. 5) DC was applied on the left and RF power measured on the right.

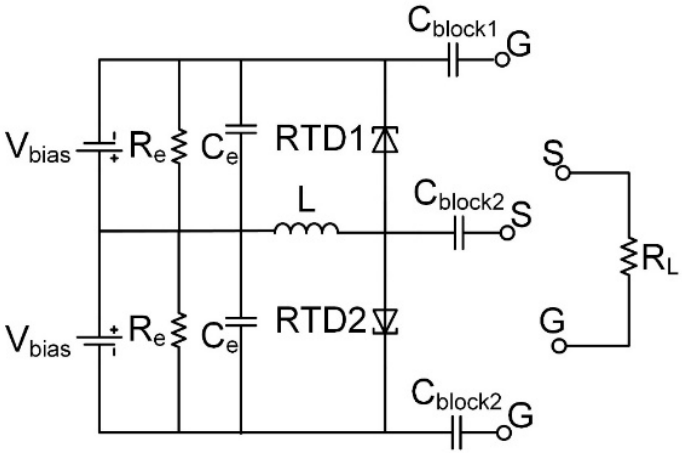

Fig. 4: Double RTD schematic circuit.

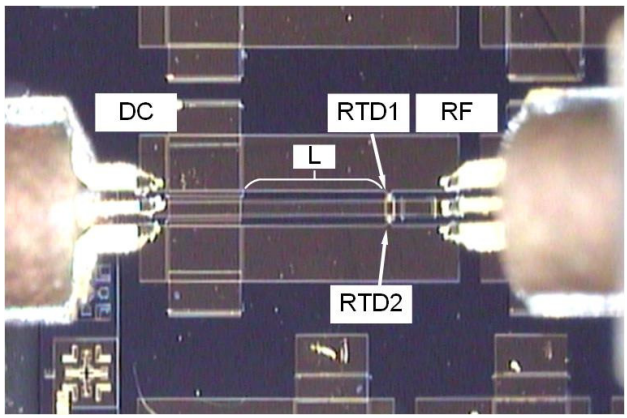

Fig. 5: Fabricated RTD oscillator with RF probe landing for measurement.

Table 1: Showing the RTD results obtained to date. (Come to the iBROW workshop to hear the latest results!)

Frequency/ GHz	Size/ µm²	Output power/ mW	DC power/ mW	Ref
28	25	0.85	280	Elec. Lett., **49**, p. 816–818 (2013).
75	16	0.95	360	Proc. PRIME 2015, pp. 262–265.
84	16	2	96	Paper in preparation
307	16	1	240	Paper in preparation

Wireless communication measurement

By using these high power oscillators, the Glasgow team has successfully demonstrated a tens of gigabits wireless link over several cm (Fig. 6). The PRBS data was imposed through a bias-tee from the DC side of the oscillator. The high power carrier was modulated using amplitude shifting key (ASK) and transmitted through a horn antenna. On the receiver side the signal was demodulated by an envelope detector and amplified with a low noise amplifier (LNA). Results showing 2.5 Gbps data transmission using a 312 GHz 0.15 mW RTD transmitter were presented at ICUMT 2017 (Munich, Germany, 06-08 Nov-2017).

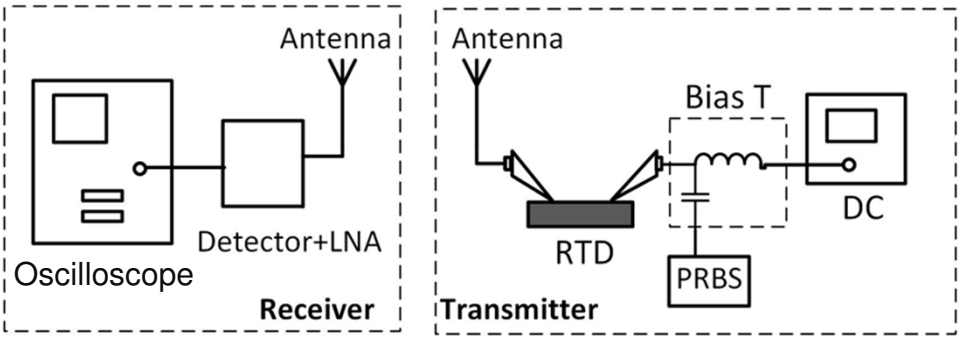

Fig. 6: Transceiver block diagram
LNA: low noise amplifier
PRBS: pseudo-random binary sequence

For more info contact
Jue Wang
Jue.Wang@glasgow.ac.uk

RTD-photodiode (RTD-PD)

By inserting an extra light absorption layer (Fig. 7) the RTD can be modulated by a coupled laser. One of the fabricated RTD-PDs (shown in Fig. 8) had a central emitter size of *c.* 225 µm² with an optical window of 50 µm². (The RTD-PD oscillator circuit is the same design as a normal RTD oscillator.) The optical response has been measured by other partners in the iBROW project. The maximum DC response of the RTD-PD was 5 A/W @1310 nm and 2 A/W @1550 nm. The Glasgow team has achieved 35 mW for an 11 GHz oscillator and 10 mW at 50 GHz (paper in preparation).

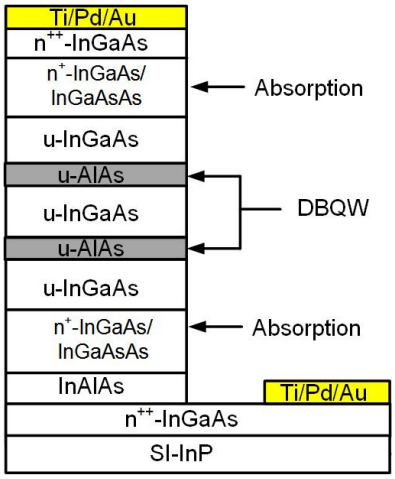

Fig. 7:Schematic RTD-PD layer structure

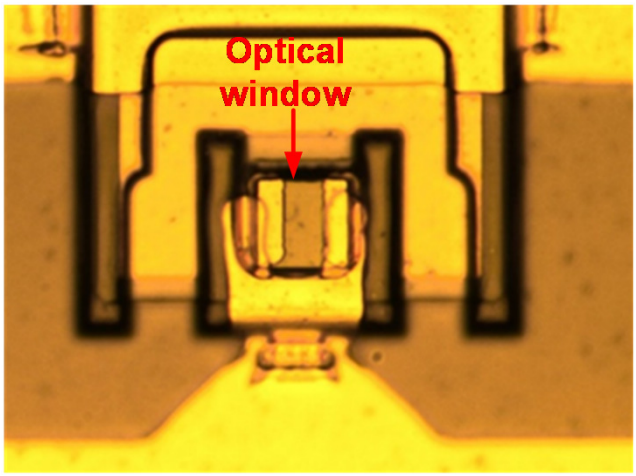

Fig. 8: Fabricated RTD-PD device.

Laser dynamics measurement techniques

Within the iBROW project, CST has been investigating laser dynamics measurement techniques such as the electro-optical transmission technique (S_{21}) and the Relative Intensity Noise (RIN) technique. The laser device used within the iBROW project, designed for 10 Gbps data transmission, has been characterised using both the S_{21} and the RIN method. A comparison between both measurements showed agreement regarding the speed of a signal that can be transmitted through the laser device.

The RIN technique offers an advantage over the S_{21} technique given its capacity to extract intrinsic dynamic information from the laser output without the requirement for either high speed carriers or probing equipment. This can greatly help to reduce both the cost and the time required for laser characterisation.

Within this development and investigations, CST is interested in the exploitation of the RIN technique as a method for volume characterisation of laser dynamics that can greatly help to comprehend the subtle statistical variations in a particular high speed laser design production line. These variations affect a number of relevant parameters including wafer yield and process reliability. Within the iBROW project CST has also collaborated with the consortium in matters regarding the implementation of the 10 Gbps RTD-LD receiver device and the optically modulated RTD-PD device.

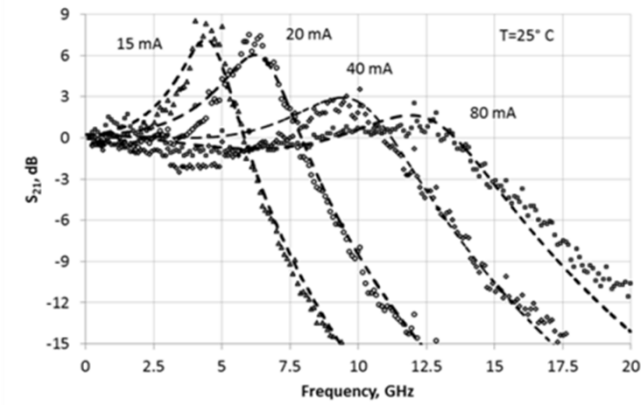

Fig. 9: Measurement of S21 performed on device on high speed tile. [Pre-iBROW work.]

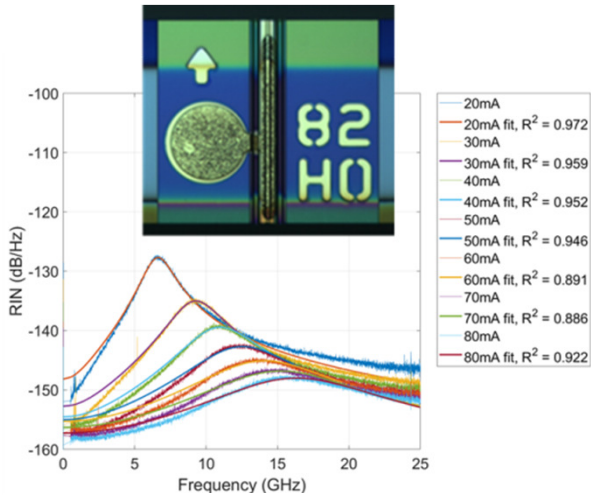

Fig. 10: Measurement of RIN performed on device on plain tile.

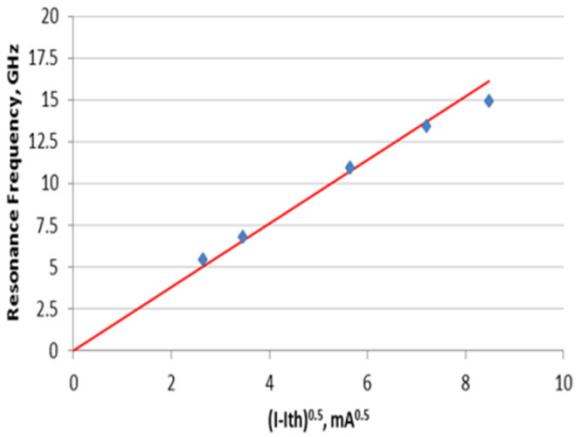

Fig. 11: Extracted resonance frequencies using the S21 technique. [Modulation efficiency 1.9 GHz/mA$^{0.5}$]

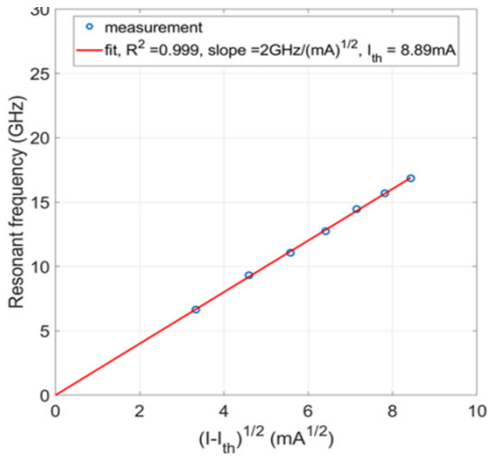

Fig. 12: Extracted resonance frequencies using the RIN technique. [Modulation efficiency 2.0 GHz/mA$^{0.5}$]

fotonIC: Fibre Coupled PIC Platform

TURN-KEY PIC Packaging Platform- *Edge Coupled Fibre Alignment*

The landscape of existing PIC requirements and packaging solutions is vast and hugely variegated in its needs. This has often led to specific application-oriented, expensive and tailored solutions. Optocap intends to bring down the complexity and cost of PIC packaging via the introduction of a flexible and robust solution which could cater to the broader needs of industry, while still keeping the ability to be tailored for more specific applications.

In industry, generally it is expected that once the customer has designed a PIC for their application, then it can be packaged on the outlined criterion by the customer. This approach often results in “re-inventing the wheel” as there can be significant correlation in several applications with design overlap. The entry fee is higher and re-designing of package is costly once PIC has already been designed.

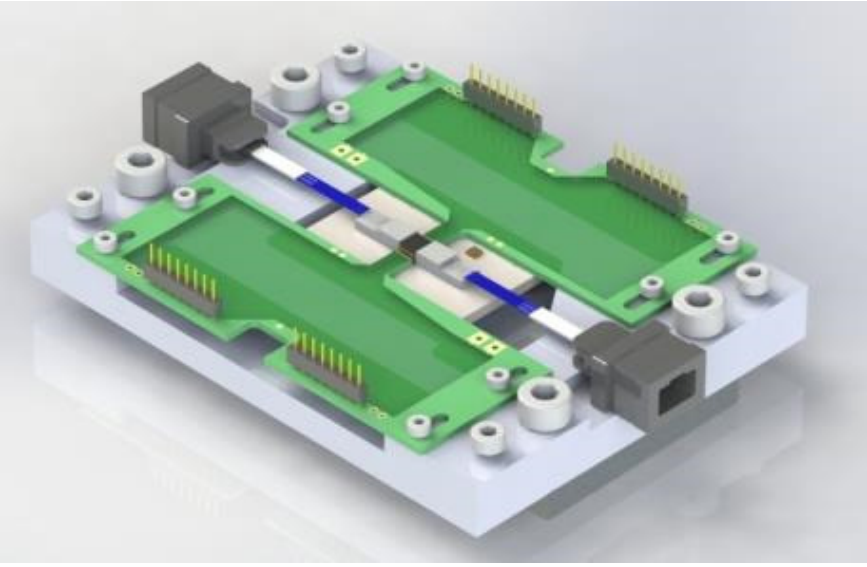

Fig. 13: CAD drawing of an example of Optocap’s new PIC packaging platform fotonIC. Using a standardised approach to package design, fotonIC could offer customers a much more cost-effective packaging solution rather than bespoke designs for each product iteration.

For more info contact
Ian.Oxtoby@optocap.com

FLEXIBLE PIC assembly

A standardised approach to package design for pitch affects the package design cost significantly since it allows the utilisation of commercial off-the-shelf (COTS) parts as well as in-house developed processes. The package cost mainly comes from the need to develop new process, *e.g.* optical alignment or new assembly procedures, to help achieve the product goals. Cost increases further with the addition of supporting optical/ mechanical components designed specifically for that package only.

By allowing a standardised package assembly to guide a PIC design, the re-designing of package and optical alignment procedures is no longer necessary. This allows the use of standard FVA (Fibre V-groove Array) alignment procedures.

Often PICs are difficult and expensive to metalise. Another route to minimise costs is through the use of Optocap’s in-house epoxy die attach processes instead of using solder die attach (unless extreme thermal conductivities are required). This also reduces the cost of metallisation on used parts along with complexity of metalizing the PICs.

By simplifying the packaging platform, Optocap has significantly reduced the assembly and design time for the customer. By eliminating the need to re-design the layout to ‘fit in’ with the customers device Optocap makes the standardised assembled and functioning package available to the customer in less than half the normal time.